ARCTOS
CONSTRUCTION SYSTEMS™

LS250

HIGH-CAPACITY LASER-GUIDED SCREED

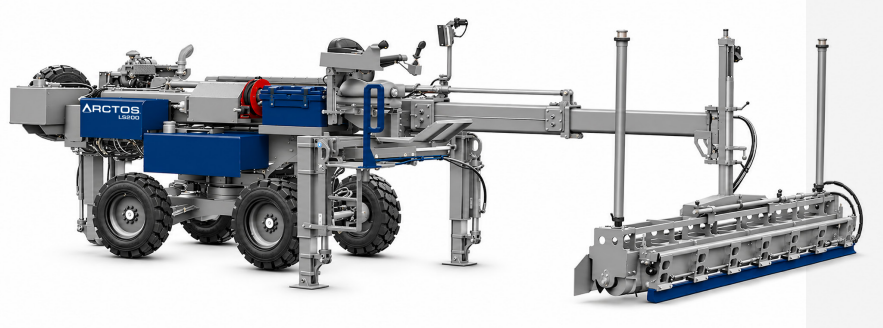

LONG REACH AND A WIDE PASS FOR HIGH-PRODUCTION SCREEDING

The Arctos LS250™ is built to screed more and screed faster, combining a 20 ft heavy-duty boom with an 11 ft High Performance head and optional 12.5 ft head. A 45 HP Kubota turbocharged diesel engine and all-wheel drive deliver power and traction.

The machine features an elevated operator platform with twin joysticks, a 7” touchscreen, SCREEDVIEW camera system, SCREEDSHIFT technology, onboard pressure washer, tool storage, and high-capacity water tanks.

11,500 LB	20’	11’	220 SQ FT
MACHINE WEIGHT	BOOM REACH	SCREED HEAD WIDTH	COVERAGE / PASS

KEY FEATURES

All-Wheel Drive
Two-speed drive range for traction and mobility.

SCREEDSHIFT
Pivoting frame technology for head positioning.

SCREEDVIEW
Four-camera visibility system.

GEN 2 Wireless Control
Remote machine operation capability.

Onboard Pressure Washer
Integrated cleanup capability.

Twin-Joystick Platform
Elevated operator station with touchscreen display.

ARCTOS
CONSTRUCTION SYSTEMS™



Engine Size	Kubota V1505T, 4-cylinder / 3,000 rpm, Turbo-Diesel
Machine Size (Retracted)	W-8' 4" (2.5 m) x L-18' 8" (5.7 m) x H-7' 2" (2.2 m)
Machine Weight	11,500 lbs. (5,216 kg)
Steering System (Hydraulic)	Two Wheel
Drive System (Hydraulic)	All Wheel Drive
Parallel to the Pour Driving Capable	Yes - 360 degree drive frames (Zero Turn Capable)
Lighting System	2 forward and 2 rear LED light pods
Machine Operation Control	Operator Platform with Twin Joystick Control or 100% Wireless Remote Control
Coverage per screed pass (No overlap)	220 sq ft (20.4 sq m)
SCREEDSHIFT range of motion	12 degrees total motion: 6 degrees left and right
Boom Reach	20' (6.1 m)
Self-contained Concrete Additive Sprayer System	Standard
Diagnostics	Dual Parker MD4, 7" Touchscreen Color Display
Machine Length When in Trailer Mode	26' 9" (8.1 m)
Grade/Slope/Dual Slope control (Standard)	Topcon LS-B200W Receivers (Included)
Contoured Slope 3D Capable (Optional)	Topcon 3D or Leica 3D

Ready to learn more about the LS250?

SALES: 812-903-4500 EMAIL: sales@arctoscs.com WEB: arctoscs.com

10/26