The Power Buggy

Electric Concrete Buggy

User Manual



MODEL: EPB4816

Operation • Maintenance • Troubleshooting • Parts

Part no. 200999, 10.08.2020

Table of Contents

Table of Contents **2**
Introduction **4**
Thank you 4
Limited warranty 4
Warranty statement 4
Warranty procedure 6
Safety 8
Safety alerts 8
Damage warning, notes and tips 9
General safety rules 9
General Description **10**
Machine identification 11
General specifications 11
Dimensions 12
Major components 13
Operation **14**
Controls and indicators 14
Pre-operation inspections 17
Worksite inspections 17
Equipment inspections 18
Mounting and dismounting 19
Starting the buggy 19
Driving the buggy 19
Filling and dumping 22
Shutting down the buggy 23
Charging the batteries 23
Lifting the buggy 25
Pushing or pulling the buggy 25
Transporting the buggy 26
Maintenance **27**
Service intervals 27
Routine maintenance procedures 28
Cleaning the buggy 28

Checking the battery charge level 28
Checking the hydraulic oil level 28
Inspecting the operating controls 28
Checking the throttle 29
Inspecting the tires and wheels 29
Lubricating the steering column 29
Checking the battery water level 32
Changing the hydraulic oil in power pack 32
Repacking the rear wheel bearings 32
Changing the lube in gearbox 33
Repair 34
Tires 34
Wheel drive gearbox 35
Storing the buggy 36
Recommended spare and maintenance parts 36
Troubleshooting 37
Parts 38
Electrical group 38
Electric schematic 40
Battery Wiring 42
Batteries 43
Hydraulic components (1 of 2) 44
Hydraulic components (2 of 2) 45
Hydraulic system install 46
Dump box 48
Dump box mounting 49
Drive wheels 51
Steering system (1 of 2) 53
Steering system (2 of 2) 54
Battery tray 56
Panels 58
Operator platform 60
Decals / Manual 62
Appendices ..... Error! Bookmark not defined.
Service record 64

Introduction

Thank you

Thank you for choosing the Electric Concrete Buggy manufactured by The Power Buggy LLC.

This equipment was designed and manufactured in the USA with quality materials and workmanship. With proper use and care, it will provide many years of trouble-free service.

Keep this manual handy for frequent reference and to pass on to new operators or owners. Please contact The Power Buggy LLC if you need assistance, information or additional copies of the manual.

The information in this user manual is in effect at time of printing. The information is subject to change without notice.

Limited warranty

Warranty statement

THE POWER BUGGY LLC (TPB) warrants to the original purchaser that such equipment, accessories, parts and other products manufactured by TPB will be free from defects in workmanship and material for a period of one (1) year after the date of first delivery or for one thousand (1,000) hours of use, whichever comes first; provided that Buyer sends TPB notice of such defect within thirty (30) days of its discovery.

Should defects be discovered, the Buyer must clearly establish that (I) the equipment, parts, etc. have been properly installed and set up, maintained and operated within the limits of rated and normal usage and (II) the defect did not result in any manner from the intentional or negligent action or inaction of Buyer. Buyer must also return the defective item or items to TPB, Independence, OH for inspection at TPB's request. If Buyer cannot establish that conditions (I) and (II) have been met, then this warranty shall not cover the alleged defect. Failure to give notice of defect within such period shall be a waiver of this Warranty and any assistance rendered thereafter shall not extend or revive it. THIS WARRANTY IS LIMITED TO THE BUYER AND IS NOT ASSIGNABLE OR OTHERWISE TRANSFERABLE.

TPB MAKES NO WARRANTY WITH RESPECT TO PARTS, COMPONENTS, EQUIPMENT AND ACCESSORIES NOT MANUFACTURED BY TPB SUCH AS FIXTURES, BALLASTS, ENGINES, HYDRAULIC PUMPS, FUEL PUMPS, ALTERNATORS, GENERATORS, WINCHES, TIRES AND ELECTRICAL COMPONENTS. Accessories, assemblies and components included in products of TPB, which are not manufactured by TPB, are subject only to the warranty

of their respective manufacturers. TPB makes no other warranty, express or implied, and makes no warranty of merchantability or fitness for any particular purpose. This warranty shall not cover misuse, alteration, abuse, negligence, accident, acts of God, sabotage or any item in which serial numbers have been altered, defaced or removed, but shall be limited to repair or replacement of those parts which, upon inspection by TPB, appear to have been defective in material or workmanship.

TPB's liability and Buyer's sole and exclusive remedy for a failure of goods to perform as warranted and/or for any and all other claims arising out of the purchase and use of the goods, including negligence on the part of TPB, shall be limited to the repair or replacement of defective parts returned, transportation prepaid to TPB. TPB shall in no event be liable for incidental or consequential or other damages or losses resulting from a breach of warranty such as, but not by way of limitation, labor costs, loss of profits, loss of use of other than equipment, third party repairs, personal injury, emotional or mental distress, improper performance of work, penalties of any kind, loss of service of personnel, or any other damages or losses which may be experienced by the Buyer.

A product warranty certificate must be filled out in its entirety and returned to TPB in order to process any warranty claims submitted.

THIS WARRANTY IS EXPRESSLY IN LIEU OF AND EXCLUDES ALL OTHER WARRANTIES, EXPRESSED OR IMPLIED (INCLUDING ANY WARRANTY OF MERCHANTABILITY AND FITNESS OF ANY PRODUCT OR GOODS FOR A PARTICULAR PURPOSE) AND ALL OTHER OBLIGATIONS OR LIABILITIES ON TPB's PART, AND TPB NEITHER ASSUMES NOR AUTHORIZES ANY OTHER PERSON TO ASSUME FOR TPB ANY OTHER LIABILITY IN CONNECTION WITH THE SALE OF TPB's PRODUCTS. THERE ARE NO WARRANTIES WHICH EXTEND BEYOND THE DESCRIPTION ON THE FACE HEREOF.

Warranty procedure

The specific language of this warranty will determine THE POWER BUGGY LLC 's obligation in connection with its product. The information presented below should be used as a general guide for implementation of policy. In the event of a component failure during the warranty period it should be repaired as soon as possible, preferably at an authorized THE POWER BUGGY LLC service center. If component is manufactured by a company other than THE POWER BUGGY LLC, such as Deutz, Honda, Isuzu, Leroy Somer, Lister Petter, Lombardini, Wisconsin, etc., the applicant should pursue repair and/or reimbursement through that manufacturer, and its dealer/distributor network.

To file a claim with THE POWER BUGGY LLC, an APPLICATION FOR WARRANTY ADJUSMENT (AWA) form must be completed in its entirety. Return the completed form within fourteen days of the repair to:

ATTENTION: WARRANTY
THE POWER BUGGY LLC
5572 Brecksville Road, Suite B
Independence, OH 44131 USA
Fax: 216-446-3989

THE POWER BUGGY LLC will review the AWA form. Should we desire to inspect the defective parts, we will issue you a return authorization for the defective parts. After inspecting the defective part(s), and it is determined that warranty is due, we will then, at the discretion of THE POWER BUGGY LLC, credit the applicants account or send replacement parts.

THE POWER BUGGY LLC warranty reimbursements:

- $60.00 for each hour’s labor we allow toward a repair.
- Distributors cost of parts not more than the price currently available from THE POWER BUGGY LLC.
- One-way surface freight charges on parts returned to THE POWER BUGGY LLC.

Many repairs are assigned a predetermined labor schedule, which is an average time in which a skilled technician should be able to make a repair. THE POWER BUGGY LLC will reimburse not to exceed the predetermined number of hours for a particular repair.

THE POWER BUGGY LLC does not reimburse for the following:

- Travel, travel time, nor travel labor.
- Mileage.

- Excessive diagnostic time.
- Repairs of defects, malfunctions, or failures resulting from accidents, abuse, misuse, modifications, alterations, improper servicing or lack of performance of required maintenance service.
- Repairs where defective parts were not shipped back when requested by THE POWER BUGGY LLC.
- Regular maintenance such as parts or labor for oil changes, filter changes or filters.
- Repairs where defective parts were not received by THE POWER BUGGY LLC after THE POWER BUGGY LLC issued a return authorization.

THE POWER BUGGY LLC
5572 Brecksville Road, Suite B
Independence, OH 44131 USA
Phone: 1-877-320-4639
Fax: 216-446-3989

Safety

How you operate and maintain your equipment directly affects your safety and the safety of others. Therefore, read and understand this manual and any other safety information provided, including safety decals on the equipment.

The Power Buggy LLC cannot anticipate every possible circumstance that might involve a potential hazard. The safety alerts in this manual are therefore not all inclusive.

If you use an operating procedure, installation or work method not specifically recommended, you must satisfy yourself that it is safe for you and for other persons. You must also ensure that the product will not be damaged or made unsafe by the procedure that you use.

Safety alerts

Safety alerts in this manual indicate important messages regarding safety. When you see the symbol and the signal word after, carefully read the message that follows and understand there is a possibility of injury or death if you do not adhere to the requirements of the safety message.

**Danger** indicates a hazardous situation that, if not avoided, will likely result in death or serious injury.

**Warning** indicates a hazardous situation that, if not avoided, could result in death or serious injury.

**Caution** indicates a hazardous situation that, if not followed, could result in minor or moderate injury.

Damage warning, notes and tips

**Avoid damage:** indicates a situation that could cause equipment or property damage.

Note: A note contains information necessary for proper use of this equipment.

Tip: A tip contains useful information that can improve or optimize use of this equipment.

General safety rules

The general safety rules are included in this section of the manual. Specific safety rules appear throughout the manual.

**Warning:** To prevent injury and equipment damage, adhere to the following general safety rules:

- Thoroughly read and understand the contents of this manual before installing, operating or maintaining the Electric Concrete Buggy.
- Keep this manual in a location where it can easily be accessed.
- Only allow trained/certified operators—directed by informed and knowledgeable supervision—to operate or service the machine.
- Also follow the instructions on the safety decals attached to the machine. Replace decals that are worn or missing.
- Comply with OSHA, federal, state, and local regulations.
- Use only factory approved parts to service or repair this machine. (OSHA prohibits the alteration or modification of this machine without written approval of the manufacturer.)

General Description

The Power Buggy LLC Electric Concrete Buggy model EPB4816 (Figure) is a battery-powered vehicle for transporting concrete, sand and other construction materials.

Designed to meet the needs of interior operation, the buggy is quiet and emission free and requires little maintenance.

The buggy has four batteries and features an onboard battery charger. Torque to the front drive wheels is provided by high efficiency electric motors, one for each wheel.

The buggy's dump box has a 16-cubic-foot capacity and is capable of hauling up to 2500 pounds. The dump box tips with power provided by a hydraulic lift. Dump box operation can be done by a handlebar switch, which allows the operator to keep both hands on the steering handle. Manual steering is done through the rear wheels.

The buggy is designed for excellent traction and control. A rear-positioned operator platform and a simple control panel provide safe, comfortable and convenient operation.



Figure 1: Overview

Machine identification

The serial number location is on the inside the main housing. The serial number is also stamped into the counterweight on the front of the chassis.

General specifications

Dimensions: - Length (maximum) - Length (minimum) - Width - Height	 111.17 in. (dump box tipped, platform down) 86.7 in. (dump box down, platform folded) 38.74 in. 52.38 in. (dump box down)
Ground clearance	6.75 in. (under front wheels)
Wheelbase	42.5 in.
Weight: - GVW - Transport	 1700 lb 1700 lb
Maximum load	2500 lb
Maximum speed	5.6 mph, forward and reverse
Turning radius	12 ft 9 in.
Number of occupants	One person, driver only
Dump box capacity (water level)	16 cu ft (0.6 cu yd)
Bucket ground clearance when dumping	4.25 in.
Maximum grade: - Fore and aft - Side to side	 10.5% (6°) 10.5% (6°)
Steering	Handlebars to back wheels
Brakes	Electro-mechanical parking brake
Hydraulic oil	Mobil DTE 24
Hydraulic oil tank capacity	1 quart
Batteries	Four × 12 V
Average run distance	13 miles (fully loaded)
Full charge time	4.5 hours (approximately)
Tires - Drive - Steering	 22x9.50-12, qty two, foam-filled pneumatic 4.80-8, qty two, foam-filled pneumatic

Table 1: Model EPB4816 specifications

Dimensions

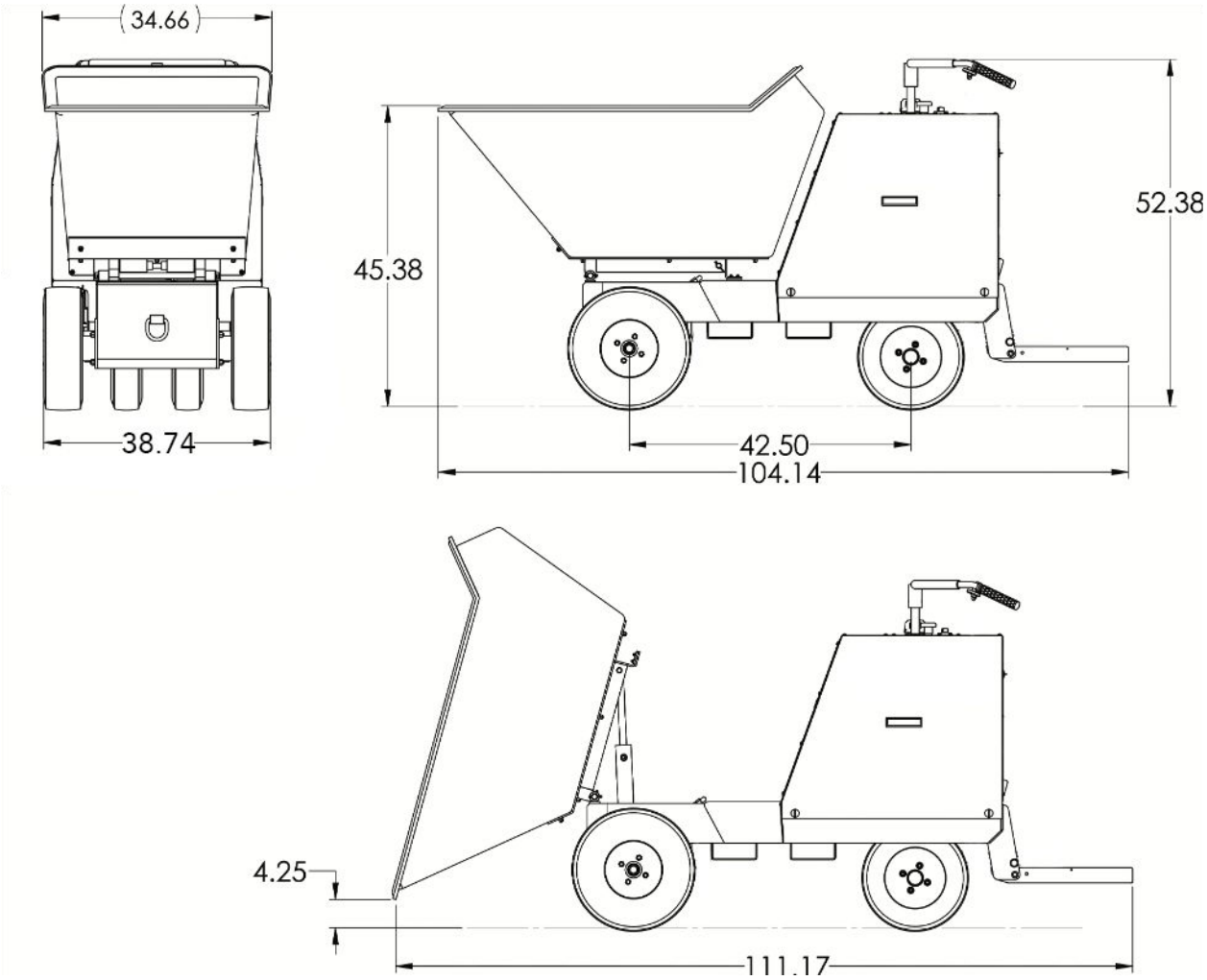

Figure 2: Overall dimensions

Major components



Figure 3: Major components, exterior

Operation

Warning: To prevent serious injury or death as well as equipment damage, adhere to the following:

- Only operate this buggy if you are a qualified and authorized operator. To be qualified, read and understand the operating instructions and safety decals on the buggy, obtain training including actual operation of the buggy, and know the safety rules and regulations for the job site.
- Only operate the buggy if it is in proper operating condition.
- Do not remove or modify any part of the buggy.
- Perform required inspections and lubrications (see page 28). Report any problems immediately. Do not operate the buggy if the inspection reveals a problem.
- Wear all personal protective clothing required for the operations being performed.

Controls and indicators

Before operating the buggy, familiarize yourself with the controls and indicators (Figure and descriptions below).

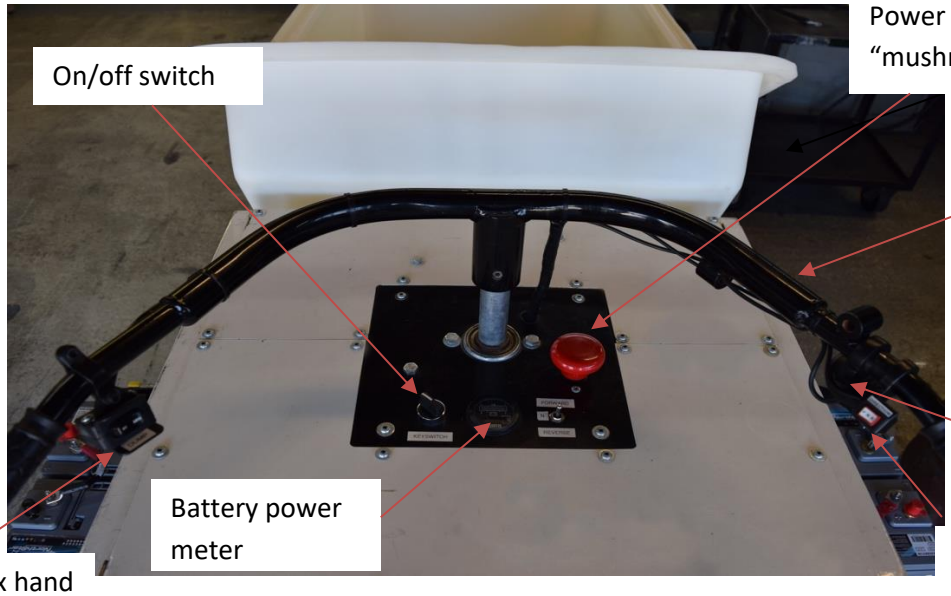

Figure 4: Controls and indicators

Steering handlebar: The steering handlebar is attached to the rear wheels. Rotating the handlebar clockwise steers the unit to the left. Rotating the handlebar counterclockwise steers the unit to the right.

On/off switch: The on/off switch has two-positions. The first position (counterclockwise) is the stop position. The second position (clockwise) is the motor start position.

Throttle: The throttle on the steering handlebar adjusts the speed at which the buggy travels. Squeezing the throttle increases speed. Releasing the throttle stops the machine.

Power on/off "mushroom" knob: The red power on/off knob turns the power on the machine so it can be started. Pressing the knob kills all power. Pulling the knob up restores power.

Travel direction switch: The travel direction switch has three positions. Pushing the switch forward sets the machine to forward travel. The center position is for neutral. Pushing the switch back sets the machine for reverse travel.

Dump box switch: The dump switch activates the hydraulic dumping mechanism. Pushing the switch forward dumps the box. Pushing the switch back retracts the box to travel position.

Battery power meter: The battery power meter (Figure) is a combination gauge that displays the state of battery charge (top) and hour meter (bottom).

Battery charge:

- Multicolor 10-bar LED displays state of charge (5 green, 3 yellow, 2 red LEDs).
- Flashing red LED signals "energy reserve" alarm at 70% discharged.
- Double flashing red LEDs signal "empty" alarm at 80% discharged.

Hour meter:

- Monitors use-time throughout the equipment's lifespan.
- Records and displays up to 99,999.9 hours on its LCD, rolls over and continues to count and display.



Figure 5: Battery power meter

Pre-operation inspections

Worksite inspections

**Warning:** To prevent serious injury or death as well as equipment damage, perform the following worksite inspections:

- Plan your work. Make sure you know where you will make your pickups, dumps and turns. Inspect the entire surface over which you will travel.
- Look for holes, drop offs and obstacles. Look for rough spots.
- On docks, ramps or floors look for weak spots. Ensure that all surfaces are capable of supporting the buggy and load.
- Look for oil spills, wet spots and slippery surfaces. Look for soft soil, deep mud and standing water.
- Clear away trash and debris along travel route. Pick up anything that might damage a tire.
- Make sure aisles, ramps, doorways and passages are clear.
- Check overhead clearances of doorways, canopies and overheads.
- On rough terrain or slopes, look for anything that might cause you to lose control or cause the buggy to tip over.
- Inspect the grade of the path you will travel. Do not travel on any areas that are too steep. The maximum permissible grade for both fore and aft and side to side is 10.5% (6°). See Figure to determine grade.
- Inspect the area for explosive atmospheres, which can result in fires and/or explosions that could cause serious injury or death. Do not operate the concrete buggy in explosive atmospheres.
- Know exactly how much clearance you have under power and communication cables. Never approach power lines with any part of your buggy unless all local, state/provincial and federal (OSHA) required safety precautions have been taken. Use extreme caution.

To determine percent grade, divide the vertical rise by the horizontal run and multiply by 100.

Example:

Rise = 2 ft

Run = 21 ft

Grade = 2/21 × 100 = 9.5%

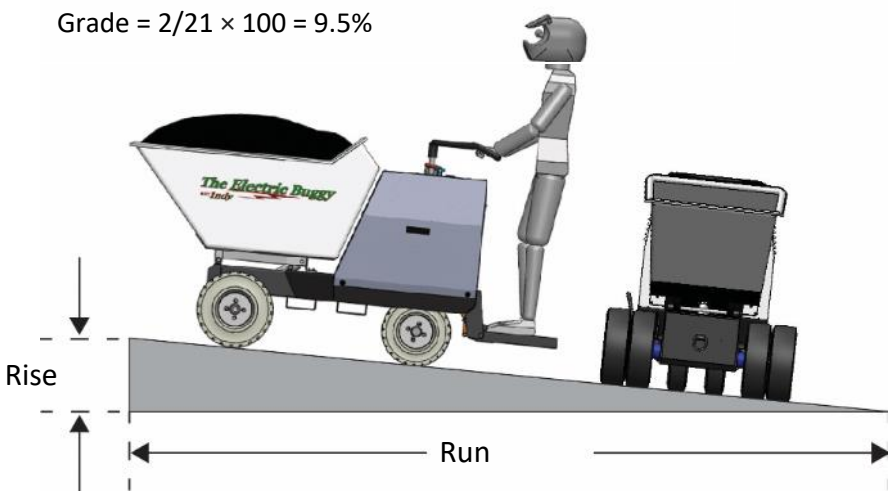

Figure 6: Determining slope grade

Equipment inspections

Avoid damage: To prevent equipment damage, ensure the equipment is clean and functioning properly by performing the daily inspections listed in the maintenance section (see page 28). If the inspection reveals a problem, report it immediately, and do not operate the equipment.

Warning: To prevent serious injury, ensure all panels and guards are in place and all safety decals are in place and legible.

Mounting and dismounting

**Warning:** To prevent injury or death, take the following precautions when mounting and dismounting the buggy:

- Ensure the buggy is stopped.
- Prior to dismounting, ensure the F-N-R stitch is set to the neutral position and the machine is powered off. Shutting the machine down sets the parking brake.
- Always use "three-point contact," and face the buggy. ("Three-point contact" means that three of four hands/feet are in contact with the buggy at all times.)
- Clean your shoes and wipe your hands before mounting the buggy.
- Be sure you have secure footing when you step off the buggy.

Starting the buggy

1. Check the battery power meter to ensure the machine is fully charged.
2. Position the travel direction switch in the center (neutral) position.
3. Pull the power on/off "mushroom" knob up.
4. Turn the on/off switch on.
5. Select F (Forward) or R (Reverse) before engaging throttle. Gently squeeze throttle lever to engage travel direction.

Note: If the on/off switch is turned on before the power on/off "mushroom" knob is pulled up, the motor will not start.

Driving the buggy

**Warning:** To prevent serious injury or death as well as equipment damage, adhere to the following safety practices when traveling with the buggy:

- DO NOT leave the buggy powered on when unattended. Always completely shut down the buggy before dismounting.
- Block wheels when buggy is not in use.

- Keep personnel clear of the buggy. Do not allow anyone to stand/pass in front of the buggy. Do not approach personnel standing in front of fixed objects.
- Do not allow others to ride on the buggy.
- Keep both hands on the steering handle.
- Operate the buggy at a slow speed to become familiar with its speed control operation, brake operation, and steering. Be certain you can control both speed and direction before moving.
- Avoid sudden starts, stops, and direction changes.
- Avoid oil spills or other wet or slippery surfaces that may cause loss of control.
- Maintain clearances from obstacles.
- If the buggy is to travel on uneven/rough terrain, do not ride on the buggy. Instead, raise and secure the operator platform and walk behind the buggy. Do not exceed creep speed.
- Only operate the buggy at full speed when traveling on a flat and level surface. When traveling on surfaces that are not flat and level, DO NOT exceed a creep speed of 10 feet in 5 seconds (120 feet per minute or about 1.4 miles per hour). Because the buggy does not have a speedometer, always apply good judgment when determining a safe and proper creep speed.
- Do not operate on surfaces with holes, drop offs, or obstacles.
- Do not use the buggy on any slope that exceeds 10.5% (6°) grade. Use extra caution when traveling on slopes of less than 10.5% (6°) grade:
    - When possible, ensure that the buggy is facing directly up or down the slope. If you must traverse across the slope, ensure that you do not exceed the permissible side-to-side slope of 10.5% (6°) grade.
    - Travel at creep speed only and ensure that stopping in a safe manner can be done at all times.
    - Avoid sudden starts, stops, and direction changes.
    - Loaded dump box: Do not travel on slopes with a loaded box facing downhill. Orient the buggy so the box is on the uphill end of the unit (so

you, the operator, are on the downhill end of the unit) as shown in Figure .

- Empty dump box: When traveling on slopes with an empty dump box, ensure the box is positioned on the downhill end of the unit (so you, the operator, are on the uphill end of the unit) as shown in Figure .

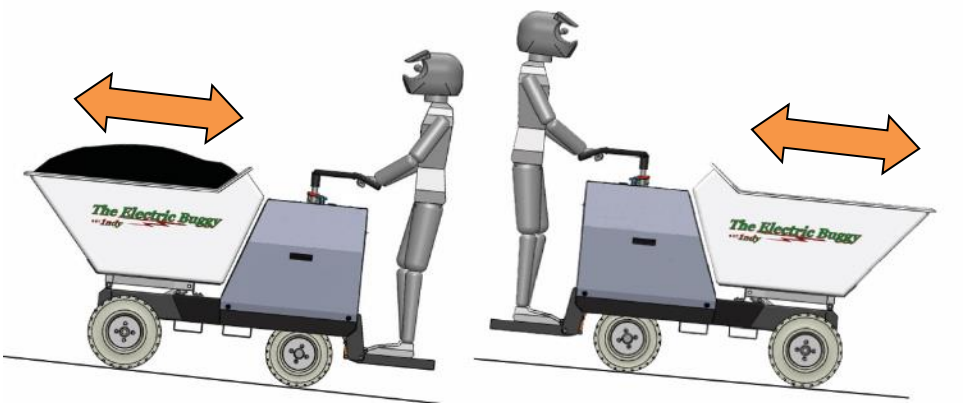

Figure 7: Required orientation on slopes, loaded (left) and empty (right)

Drive the buggy as follows:

1. Set the travel direction switch to forward or reverse.
2. Use the throttle to control the speed. Release the throttle to slow the vehicle.

Note: Because the steering wheel is in the rear, turn the steering handlebar left to turn the vehicle right and vice versa.

Filling and dumping

**Warning:** To prevent serious injury or death as well as equipment damage, adhere to the following safety practices when filling and dumping the dump box:

- Know the rated load capacity of the buggy. Do not exceed the capacity, and account for conditions that can reduce the load that should be carried such as, ground conditions, slopes, etc.
- If there is any question of overloading, separate the load into two or more loads.
- If you cannot see the placement point, use a signal person.
- Before filling or dumping the dump box, stop the buggy and set the parking brake.
- On a slope, face the dump box up hill and block the wheels. Do not dump the buggy when facing downhill on a slope.
- Do not stand in front of or alongside the buggy where you intend to unload.
- Do not dump the buggy towards other personnel.
- Do not touch, lean on, or reach through the dump mechanisms.

Fill and dump the contents of the dump box as follows:

1. Come to a complete stop.
2. Push the dump box switch forward to dump the box.
3. Push the switch back to retract the box to travel position.

Shutting down the buggy

1. Come to a full stop.
2. Set the travel direction switch to neutral position.
3. Turn the on/off switch off.

Warning: If the buggy is parked on a slope, block the wheels to avoid injury or equipment damage.

Avoid damage: The buggy must not be exposed to wet weather. A rain cover for use during storage can be purchased from The Power Buggy LLC.

Charging the batteries

When the battery power meter indicates of charge level of less than 25%, recharge the batteries as follows:

1. Push down on power on/off “mushroom” knob on top of the vehicle to disable the power.
2. Plug in via charging port. When charging is complete, unplug the buggy from charging source.

Tip: Charging the batteries too often will shorten their useful life. Charge the batteries only when they are at less than 25%.



Figure 8: Internal Batteries

Lifting the buggy

Lift the buggy from either side with a forklift or a sling using the forklift ports provided on the chassis.



Figure 9: Forklift ports

Pushing or pulling the buggy

If it is necessary to push or pull the buggy, disengage the gearing on each of the front drive wheels located inside the drive tire (see Figure 10: Drive Disconnect)



- Remove 2 small bolts that retain the center small cover
- Turn small cover over
- Bolt the small cover down – the dimple in the cover forces the input shaft to disengage from the primary sun gear
- To re-engage the unit, reverse the procedure

Figure 2: Drive Disconnect

Transporting the buggy

**Warning:** To prevent serious injury or death as well as equipment damage when transporting the buggy on a truck bed or trailer, follow these safety practices:

- Know the overall height to avoid contacting overhead obstructions such as bridges, power lines, etc.
- Make sure all tie-downs and blocks are in place and the dump box is completely lowered in the frame.
- If your buggy will be hauled by truck, check the truck and ramp capacities.
- Ensure there are no contents left in the dump box.

Maintenance

Service intervals

Task	Ref. Page	As needed	Daily (before each use)	Monthly	After 200 hours of operation	After 400 hours of operation
Clean the buggy.	28	X				
Check the battery charge level.	28		X			
Check the hydraulic oil level.	28		X			
Inspect the operating controls.	28		X			
Check the throttle.	29		X			
Inspect the tires and wheels.	29		X			
Inspect the hydraulic system.	29		X			
Lubricate the steering column.	29			X		
Lubricate the dump box hinge and lift cylinder.	30			X		
Check the battery.	32			X		
Change the hydraulic oil.	32				X	
Repack the rear wheel bearings.	32					X
Change gearbox oil	33					X

Table 2: Service intervals

Routine maintenance procedures

**Warning:** Rotating parts can cause serious injury. Do not perform maintenance procedures when the machine is running.

Cleaning the buggy

**Warning:** Take care during cleaning operations to avoid electrical shock. A wet or damp electrical component may cause a dysfunction in the machine or a short circuit in the electronic system. Only clean the unit after all power has been switched off. Do not use a pressure washer.

- To protect the environment and prevent oxidation to the machine, only use ecological cleaning products with a neutral PH and that have no danger to the skin.
- Use cleaning rags. Do not use abrasive equipment (no scrapers).

Checking the battery charge level

Look at the battery power meter to determine the battery charge level. If the charge level is low, charge the batteries (see page 24).

Checking the hydraulic oil level

1. Remove the right-side enclosure panel to gain access to the hydraulic power unit
2. Check the reservoir to ensure the hydraulic oil level is approximately ½ full. If the hydraulic oil is low, remove the reservoir cap and fill the tank with Mobil DTE24 hydraulic oil or equivalent.
3. Replace the reservoir cap and install the enclosure panel.

Inspecting the operating controls

Check all operating controls for proper operation and adjustment.

Checking the throttle

Ensure the throttle works freely and returns to the closed position when released. If operation of the throttle is not free, do not attempt to start the buggy.

Inspecting the tires and wheels

- Check the tires for damage. Replace damaged tires.
- Check the security of lug nuts. Tighten loose lug nuts.

Inspecting the hydraulic system

**Warning:** Hydraulic oil under pressure is a skin injection hazard and can cause serious injury or death. Do NOT use your hands or other body parts to check for leaks. If hydraulic oil is injected under the skin, it can cause gangrene. Seek medical help immediately.

Remove the access panels, tip up the dump box, and use a piece of cardboard to check for hydraulic hose leaks. Also check the following:

- The tightness of the whole system.
- The hydraulic piping for crushing, cracks and distortions.
- The hoses for unwinding, points of friction, crushing, cracks, porosity, etc.

Lubricating the steering column

Using a grease gun and a good grade of chassis lubricant, lubricate the grease fitting between and just above the rear wheels (see

Figure).



Figure 11: Steering column grease fitting

Lubricating the dump box hinge and lift cylinder

1. Tip up the dump box.
2. Using a grease gun and a good grade of chassis lubricant, lubricate the following grease fittings (see
3. **Figure 3**):
    - Dump box hinge: four grease fittings
    - Lift cylinder: two grease fittings

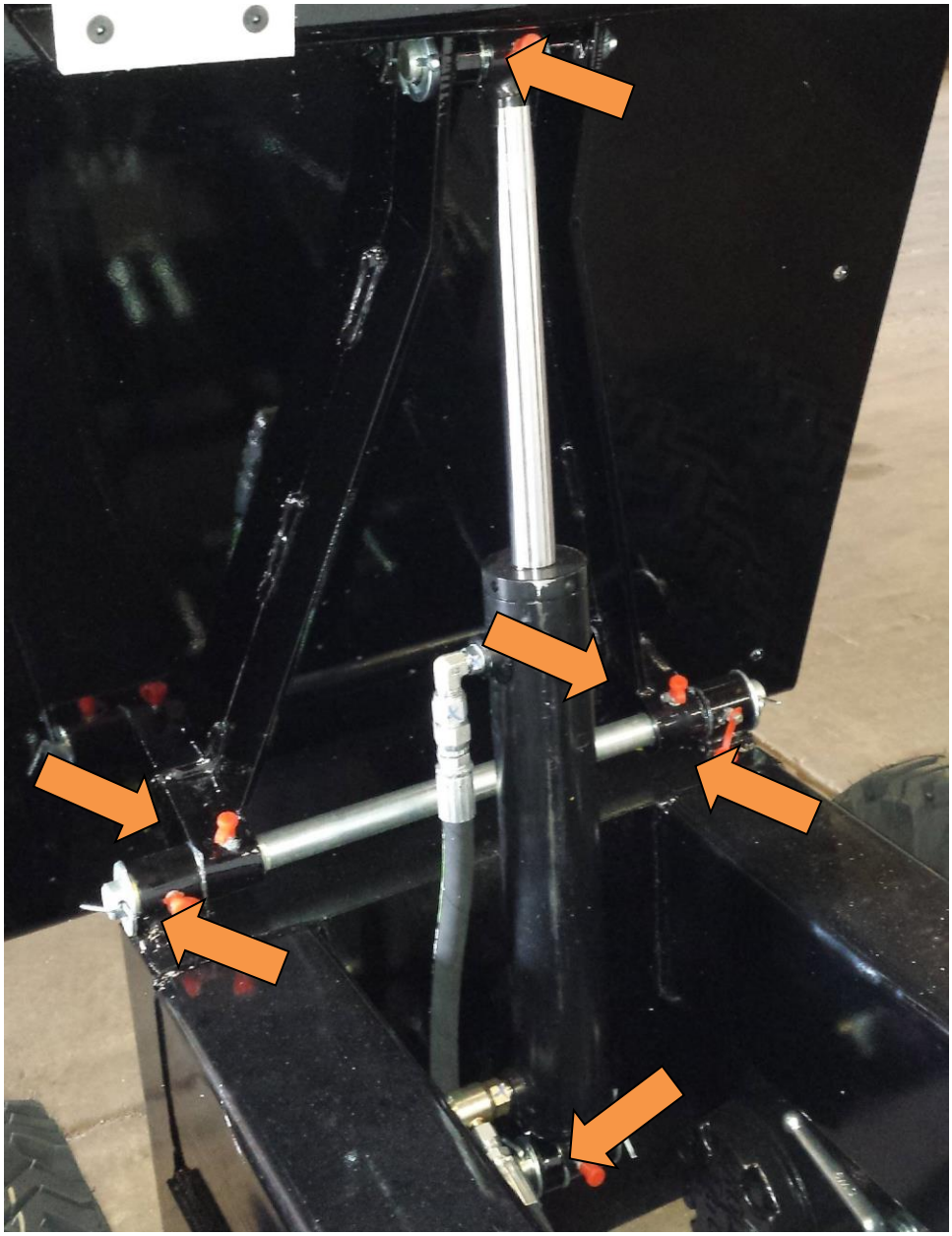

Figure 3: Dump box hinge and lift cylinder grease fittings

Checking the battery

**Warning:** When working with the batteries, ensure your safety and the safety of others as follows:

- High electrical voltage is present that can cause serious injury or death. Do not touch contacts of batteries or cables.
- When working with or around the batteries, there is a risk of fire or explosion. Use extreme caution when working with these components. Never use an open flame around batteries.
- Before any maintenance or repair work, disconnect the charger from the connector of the battery.
- Batteries contain sulfuric acid, which will cause severe burns to skin and eyes. Use appropriate safety equipment when servicing the batteries. Wear proper personal protective clothing & goggles. If acid is splashed into eyes or on skin, thoroughly rinse with water and consult a doctor immediately. Rinse with water any clothing that contacted acid.
- The batteries installed from the factory are non-serviceable AGM.

Changing the hydraulic oil in power pack

1. Remove the right-side cover, slide out the battery tray, and disconnect and remove the two batteries.
2. Using a screwdriver, loosen the clamp on the reservoir.
3. Remove and drain the reservoir.
4. Reinstall the reservoir and clamp and tighten the clamp
5. Refill the reservoir with Mobil DTE24 hydraulic oil or equivalent and replace cap.
6. Replace and reconnect the batteries and re-install the right-side cover.

Repacking the rear wheel bearings

1. Block the front wheels and prop up the rear of the machine.
2. Remove the lug nuts and remove the rear wheels.

3. Remove the hub cap.
4. Remove the cotter pin, castle nut, and washer. Remove the hub.
5. Remove the bearing seal.
6. Clean the shaft, hub bearing, and washer with parts cleaner.
7. Repack the bearing with a good grade of bearing lubricant.
8. Replace the bearing seal. Install the hub, washer, castle nut, a new cotter pin, and the hub cap.
9. Replace the wheels and lug nuts and tighten.

Changing the lube in gearbox

1. Disengage gearbox using procedure on page 26.
2. Spin gearbox until one pipe plug is located at 6 o'clock position.
3. Place drain pan to collect used oil.
4. Remove pipe plug. Loosening the remaining pipe plug will vent system allowing oil to flow more freely.
5. Once drained, spin gearbox until one pipe plug is located at 3 or 6 o'clock position with the other pipe plug located above.
6. Fill gearbox from upper plug with 80W/90 gear oil or equivalent until oil runs out of lower plug. With lower plug in 3 or 9 o'clock position, this should fill the gearbox approximately ½ full (approximately 8 oz)
7. Reinstall both pipe plugs and re-engage gearbox.



Figure 13: Gearbox lubrication

Repair

Tires

In the event you experience damaged tire, repair it as follows:

1. Securely block and support the buggy.
2. Remove the lug nuts and remove the wheel.
3. Replace wheel assembly.
4. Reinstall the wheel on the buggy. Tighten the fasteners.

Wheel drive gearbox

The wheel drives are extremely reliable and ordinarily will not need maintenance or repair.

However, should trouble develop in the drive, it is best to contact their manufacturer, Auburn Gear, at 260.925.3200 or customerservice@auburngear.com.

If necessary, The Power Buggy LLC will direct you to the proper place for repairs. Please call 877-320-4639

Storing the buggy

**Avoid damage:** To prevent damage to the buggy during storage, store as follows:

- Do not store the buggy outside.
- Choose a cool and dark secure area, free of dampness and mildew.
- Store the buggy on a level surface.
- Provide adequate protection to avoid damage by rodents and insects, which can damage rubber hoses, electrical wire and other buggy components.

Recommended spare and maintenance parts

Part	Manufacturer name	Manufacturer part code
Hydraulic oil	Mobil	DTE 24
Fuse, 10 A	Bussmann	ATC-10
Fuse, 25 A	Bussmann	Max-25
Fuse, 500 A	Bussmann	ANL-500

Table 3: Recommended spare and maintenance parts list

Troubleshooting

Problem	Root Cause	Solution
Buggy doesn't start.	On/off switch already turned on before the power on/off "mushroom" knob is pulled up.	Follow starting sequence, (page 20).
	Batteries drained.	Charge batteries (page 24).
	500 A fuse blown.	Replace fuse (left side of battery charger).
Batteries won't charge.	25 A fuse blown.	Replace fuse (above battery charger).

Table 4: Troubleshooting

Parts

Electrical group

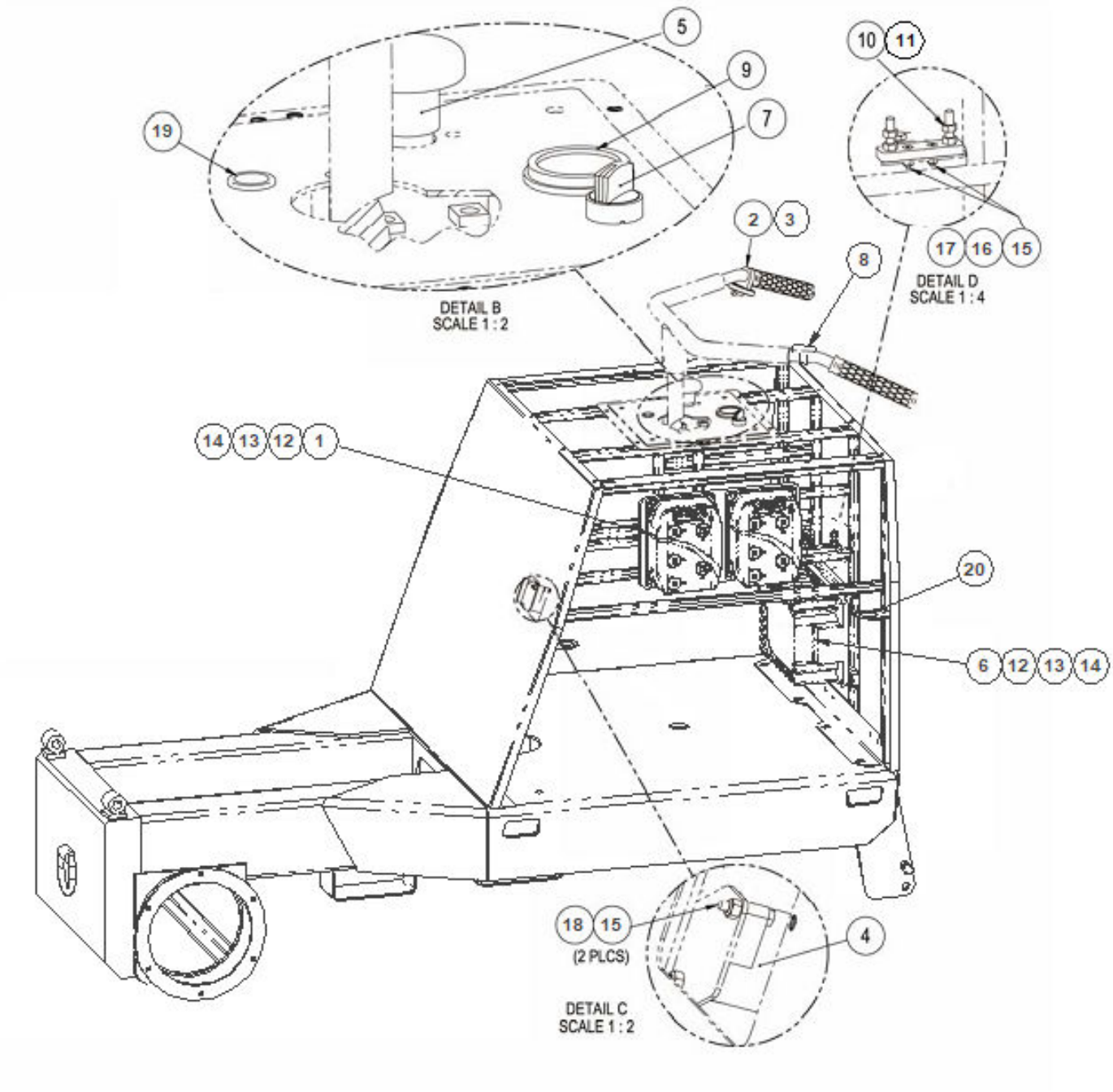

Item no.	Part number	Description	Qty.
1	200910	MOTOR CONTROLLER 48V	2
2	200299	THROTTLE, 5K POT LEVER	1
3	200922	SWITCH F-N-R	1
4	200920	CONTACTOR 24 V 250 A	1
5	200300	SWITCH E-STOP MUSHROOM	1
6	200914	CHARGER BATTERY 48V 25 A	1
7	200301	SWITCH SELECTOR 22MM 2 POS NO	1
8	200923	SWITCH DUMP ACTUATOR	1
9	200912	METER BATTERY PANEL 48 V	1
10	200118	FUSE HOLDER ANL	1
11	200307	FUSE 500 A ANL	1
12	981855	HHCS, 1/4-20 X 1.00, GR5	12
13	981745	FW, 1/4" SAE	12
14	990150	L-NUT, NYLON, THIN, 1/4-20 GR5	12
15	990150	L-NUT, NYLON, THIN, 1/4-20 GR5	2
16	981065	FW, #10, REG, Z	2
17	990140	SHCS, C-SUNK, 10-24 X .88, Z	2
18	995810	MACH SCRW, 10-24 X 1.0 ZP	2
19	681845	SNAP BUSHING	1
20	200123	BATTERY FEEDER STUD	4

Table 5: Electrical group parts list

Electric schematic

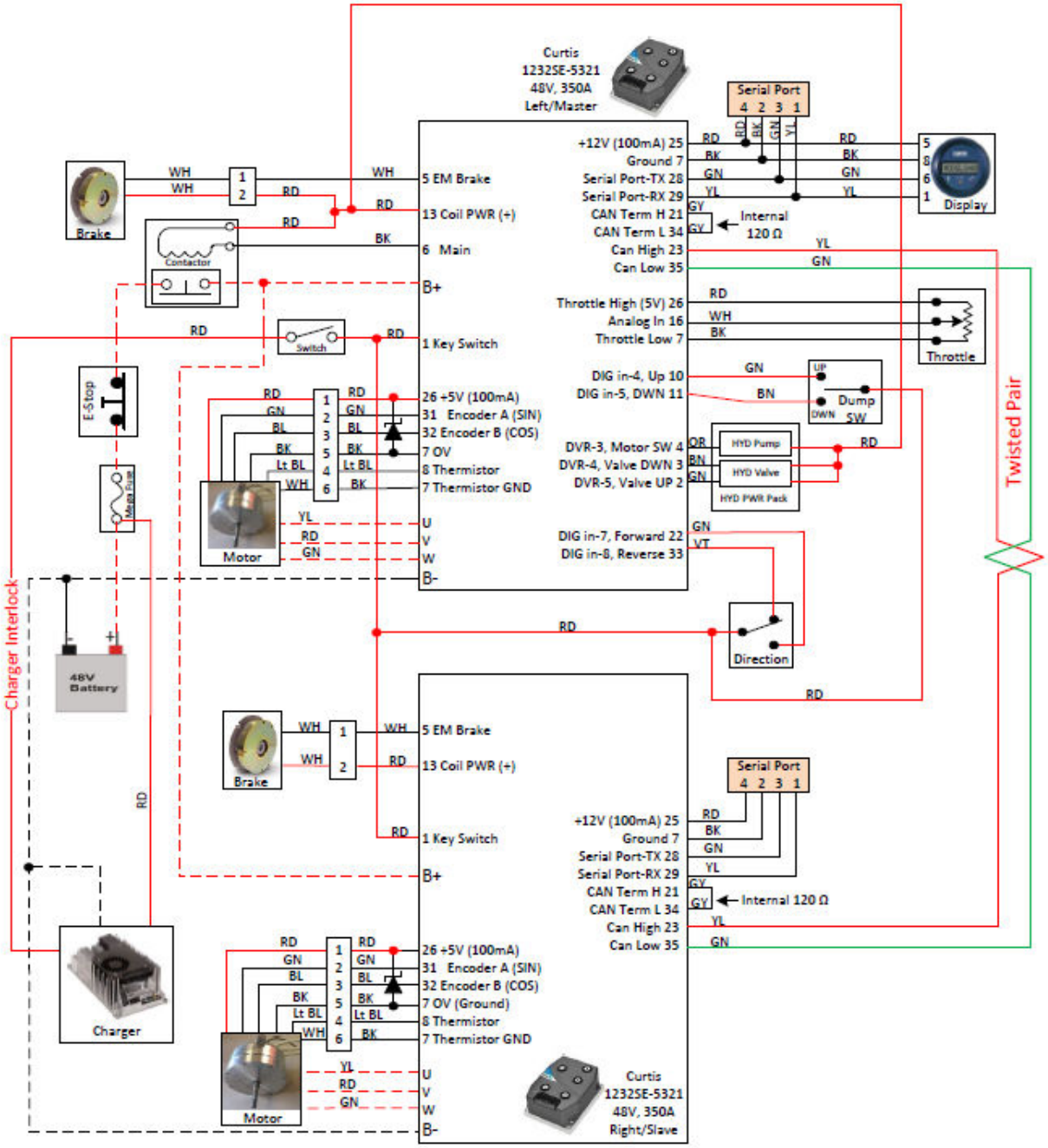

Part Number	Description	Qty.
200277-01	FUSE TO ON/OFF MUSHROOM SWITCH	1
200277-04	ON/OFF MUSHROOM SWITCH TO CONTACTOR	1
200277-07	WIRE, 48V CONTACTOR TO LH CONTROLLER B(+)	1
200277-08	LEFT HAND POSITIVE INSULATOR TO RIGHT HAND POSITIVE	1
200277-10	FUSE TO POSITIVE INSULATOR ON FRAME	1
200277-11	BATTERY (+) TO BATTERY (-)	1
200277-17	BATTERY POSITIVE TO INSULATOR	1
200277-18	BATTERY NEGATIVE TO INSULATOR	1
200800-1	MAIN HARNESS	1
200800-10	WIRE, NEGATIVE ISOLATOR TO DUMP MOTOR CONTACTOR	1
200277-07	WIRE, 48V CONTACTOR TO LH CONTROLLER B(+)	1
200800-12	WIRE, RH CONTROLLER B(-) TO ISOLATOR(-) CHASSIS	1
200800-13	WIRE, DUMP MOTOR CONTACTOR TO MAIN 48V CONTACTOR	1
200800-2	WIRE, RH CONTROLLER U TO RH MOTOR YELLOW	1
200800-3	WIRE, LH CONTROLLER W TO LH MOTOR GREEN	1
200800-4	WIRE, RH CONTROLLER V TO RH MOTOR RED	1
200800-5	WIRE, LH CONTROLLER V TO LH MOTOR RED	1
200800-6	WIRE, LH CONTROLLER U TO LH MOTOR YELLOW	1
200800-7	WIRE, RH CONTROLLER W TO RH MOTOR GREEN	1
200800-8	WIRE, LH CONTROLLER B(-) TO RH CONTROLLER B(-)	1
200800-9	WIRE, LH CONTROLLER B(+) TO RH CONTROLLER B(+)	1

Table 6: Wiring parts list

Battery Wiring

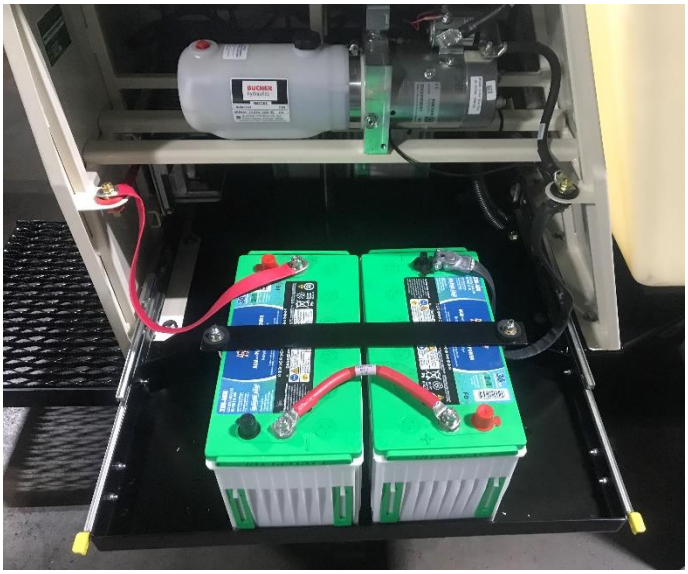

Figure 14: Right Hand Battery Wiring

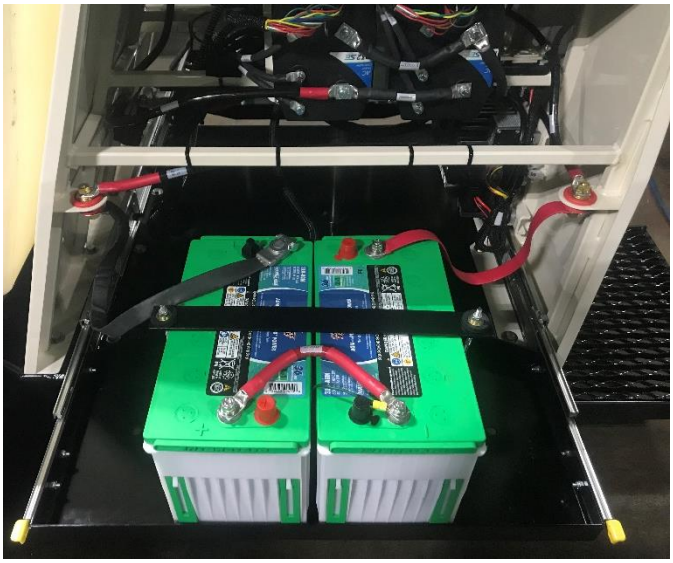

Figure 15: Left Hand Battery Wiring

Batteries

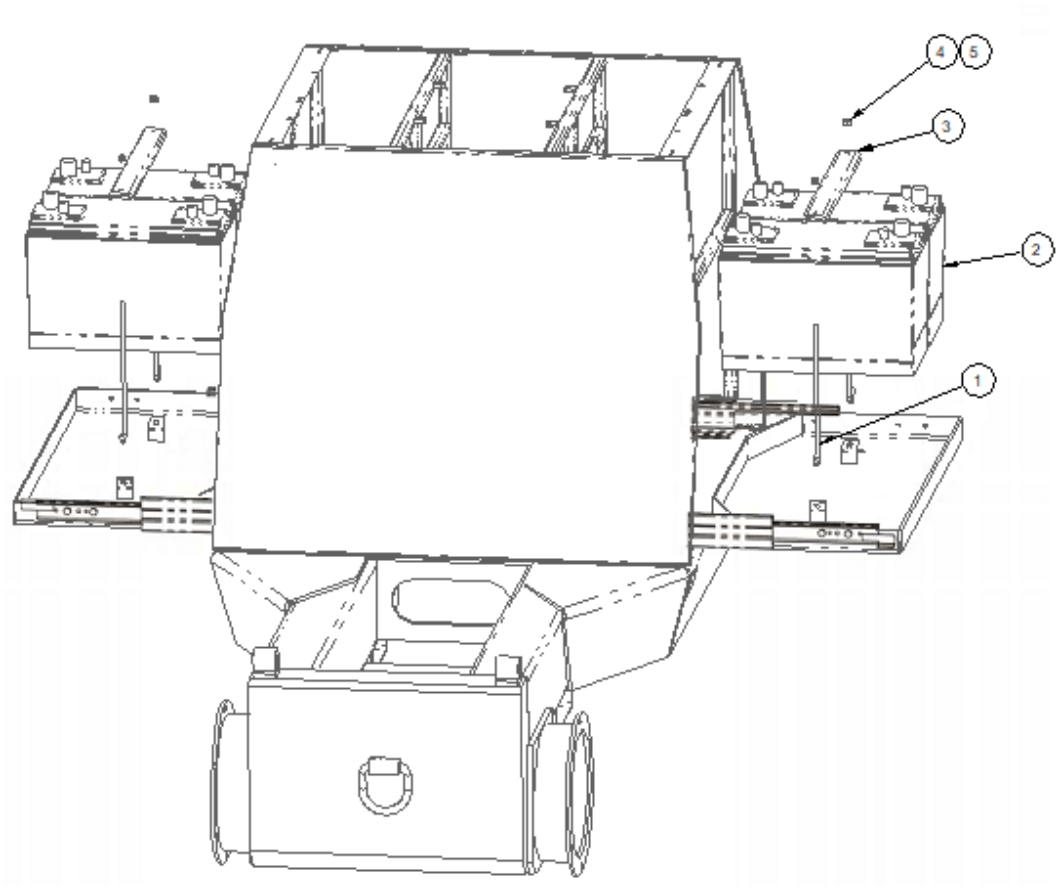

Item no.	Part number	Description	Qty.
1	200926	J-HOOK, BATTERY HOLD DOWN	4
2	INT31MAGM	BATTERY 12 V	4
3	200927	BRKT, BATTERY HOLD DOWN	2
4	990150	L-NUT, NYLON, THIN, 1/4-20 GR5	4
5	981745	FW, 1/4" SAE	4

Table 7: Batteries parts list

Hydraulic components (1 of 2)

BUCHER
hydraulics

3.20 Model M-3541

Description

- Pump / Motor / Reservoir / Valve
- Check Valve
- Externally Adjustable Relief Valve
- 1 x 4-Way/2-Position Solenoid Cartridge Valve Located in the Base
- #6 SAE Outlet
- Horizontal Mounting Standard

Popular Options

- Control Box and Cord
- Vertical Mounting / Motor Up

Schematic

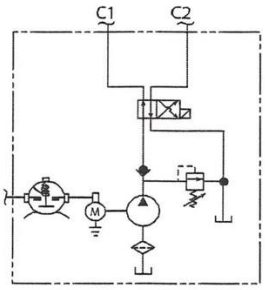

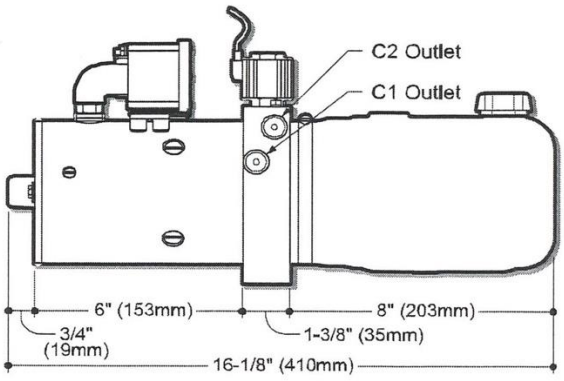

SIDE VIEW

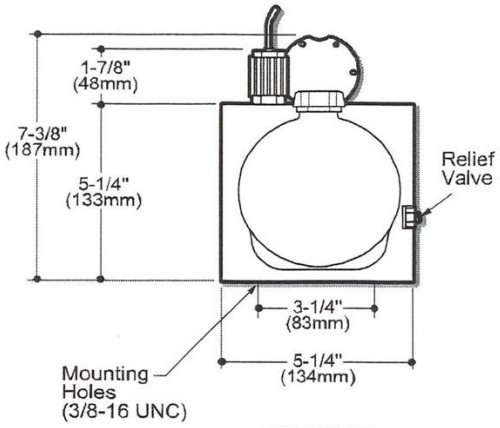

END VIEW

Hydraulic components (2 of 2)

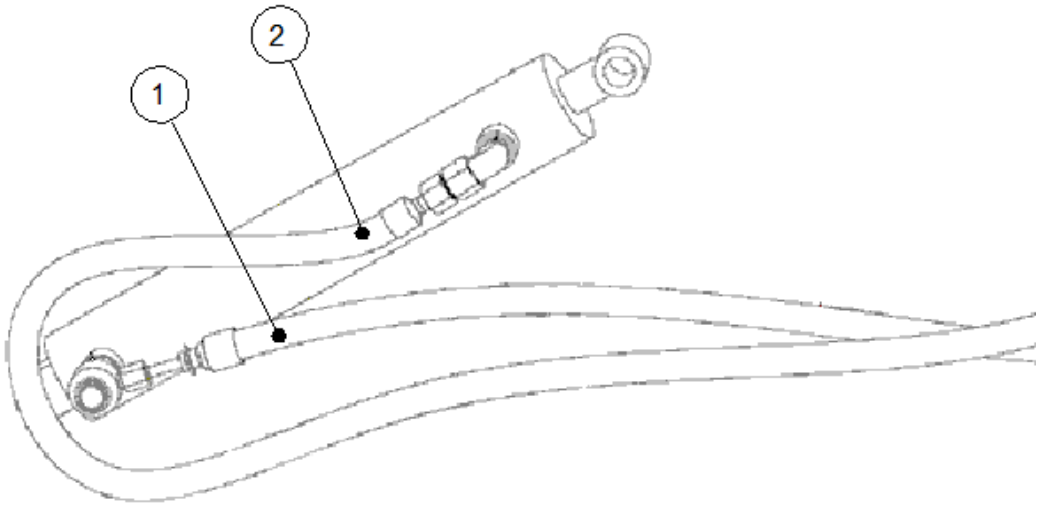

Item no.	Part number	Description	Qty.
1	200932	HOSE, CYL UP	1
2	200934	HOSE, CYL DOWN	1

Table 8: Hydraulic components parts list

Hydraulic system install

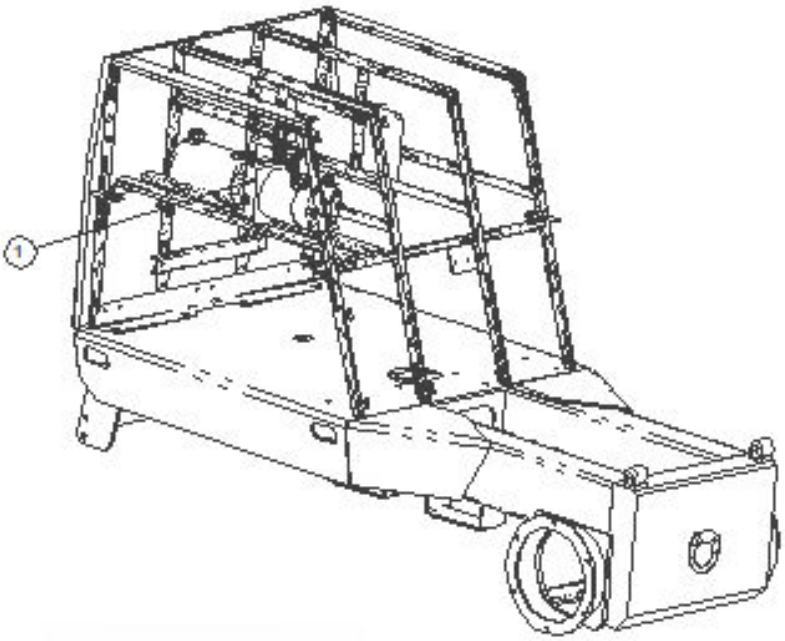

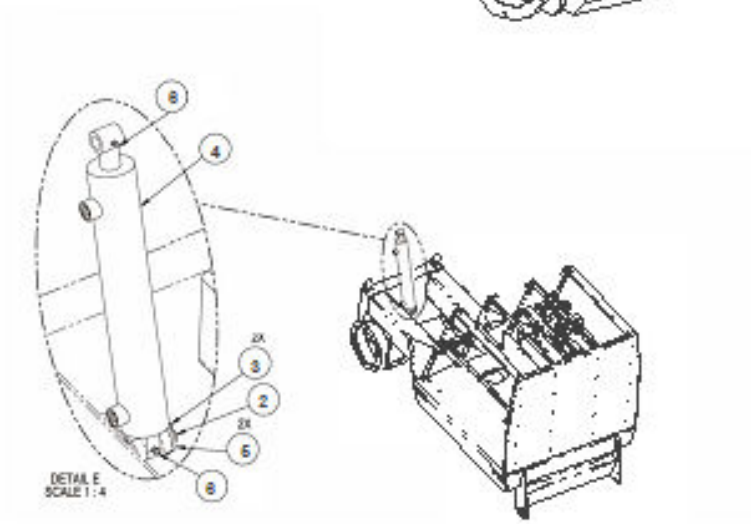

Item no.	Part number	Description	Qty.
1	200930	HYD POWER PACK - BUCHER MODEL M-3541	1
2	W470795	PIN	1
3	796075	COTTER PIN	2
4	W8396	CYL, BUCKET	1
5	993870	WASHER, ¾”	2
6	794550	GREASE FITTING	2

Table 9: Hydraulic system install parts list

Dump box

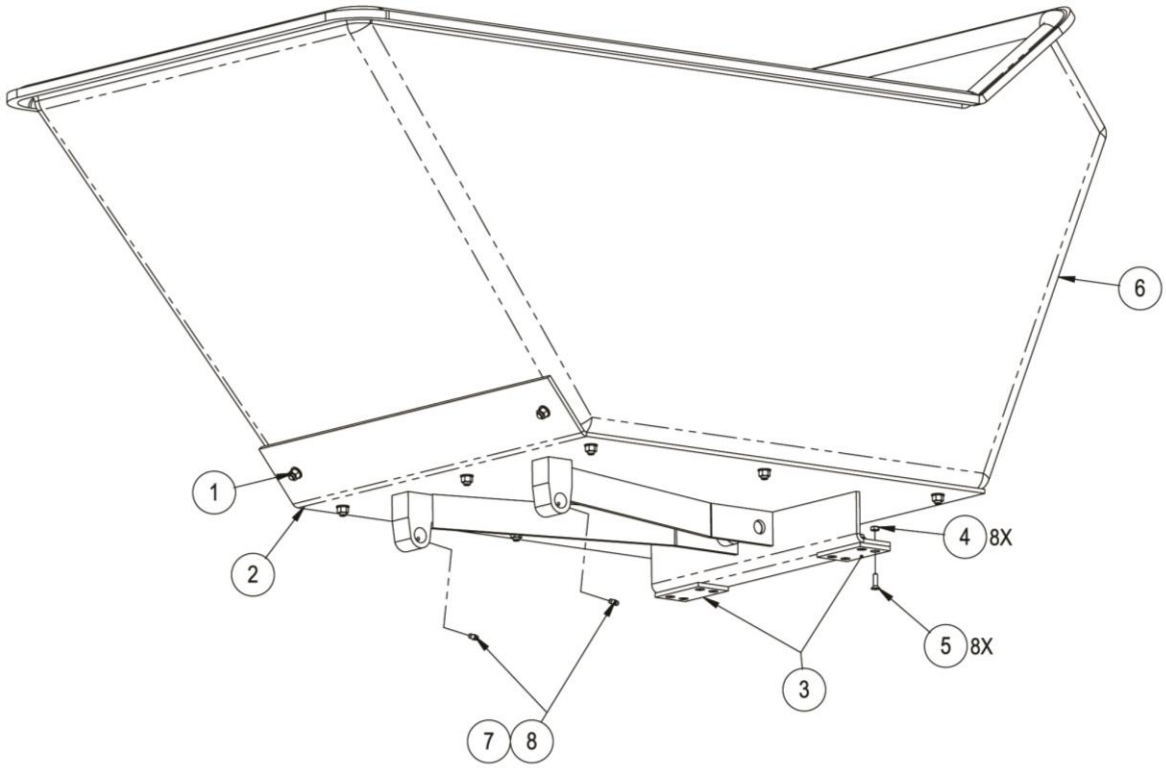

Item no.	Part number	Description	Qty.
1	108830	HARDWARE KIT, BUCKET MOUNTING	1
2	200198	WLDT, BUCKET BASE	1
3	200210	PAD, BUCKET BASE	2
4	200211	L-NUT, NYLON, THIN, 1/4-20 GR5	8
5	200224	SHCS, C-SUNK, 1/4-20 X 0.88, Z	8
6	610652	BUCKET, 16 CF	1
7	796555	CAPLUG	2
8	796580	FITTING, GREASE	2

Table 10: Dump box parts list

Dump box mounting

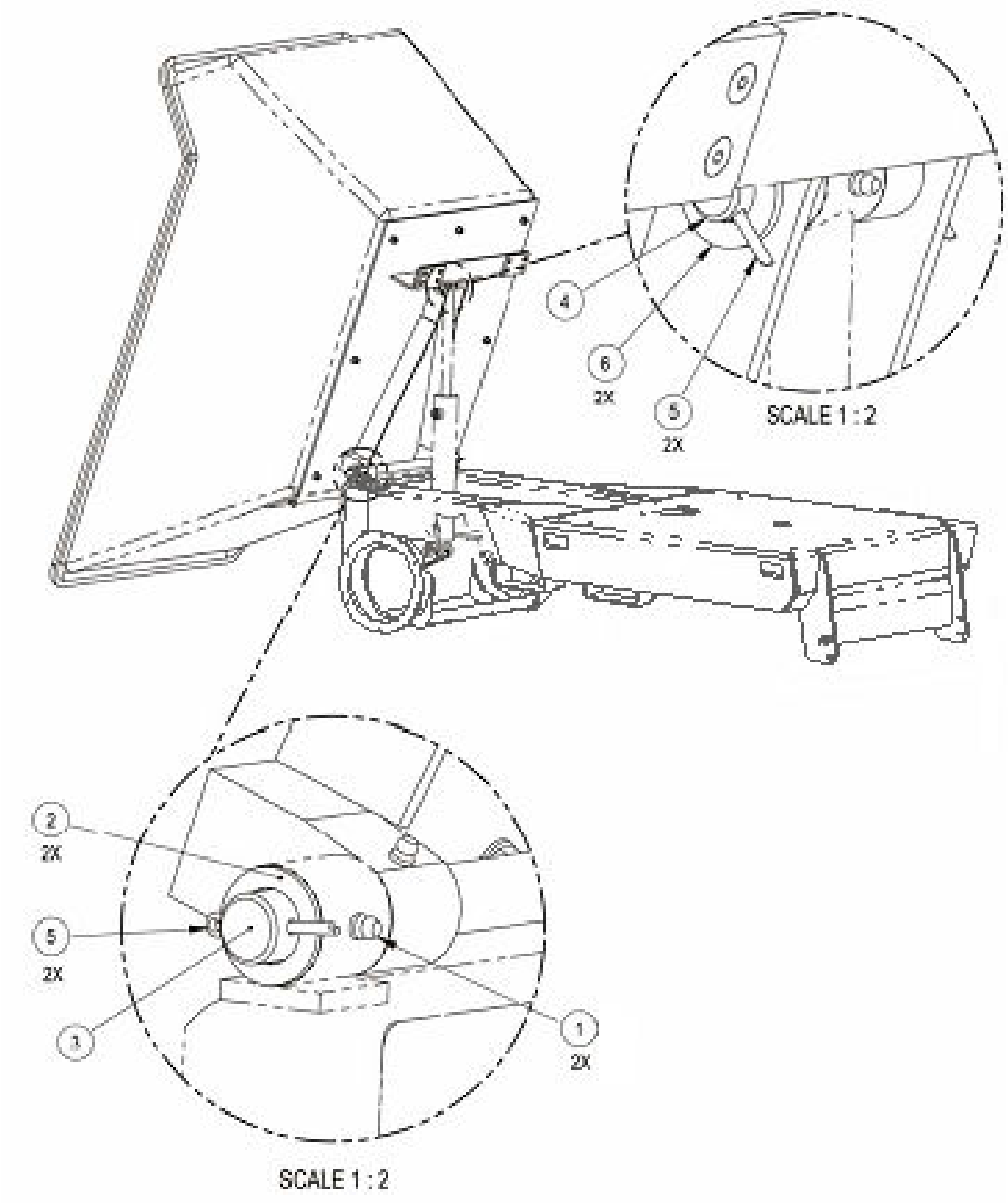

Item no.	Part number	Description	Qty.
1	794550	FITTING, GREASE	2
2	996200	WASHER	2
3	W8046	PIVOT PIN	1
4	W8122	PIN	1
5	796075	COTTER PIN	4
6	993870	WASHER, ¾”	2

Table 11: Dump box mounting parts list

Drive wheels

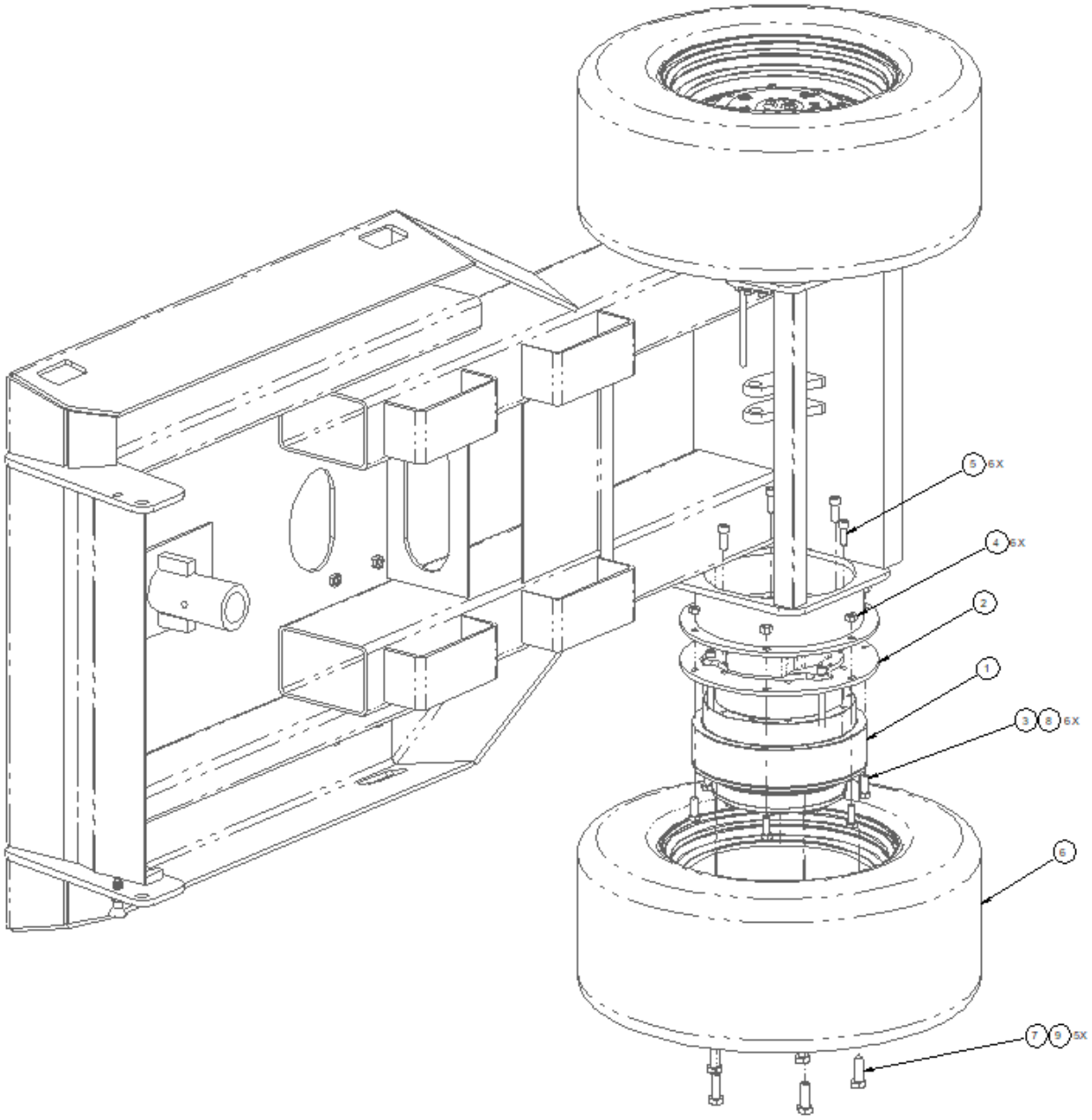

Item no.	Part number	Description	Qty.
1	200905	ET010M2H1S1049B4X POWER WHEEL	2
2	200907	ADAPTOR, MTR MNT	2
3	200908	3/8-16UNC X 1.00 HEX HD BOLT	12
4	980300	3/8-16UNC GRADE 5 NUT	12
5	200909	3/8-16UNC X 1.00 SHCS	12
6	842122	WHEEL ASSY – FOAM FILLED	2
7	200960	M12 X 1.5-6g X 35MM HEX HD BOLT	10
8	981120	WASHER-3/8	12
9	200961	WASHER-M12	10

Table 12: Drive wheels parts list

Steering system (1 of 2)

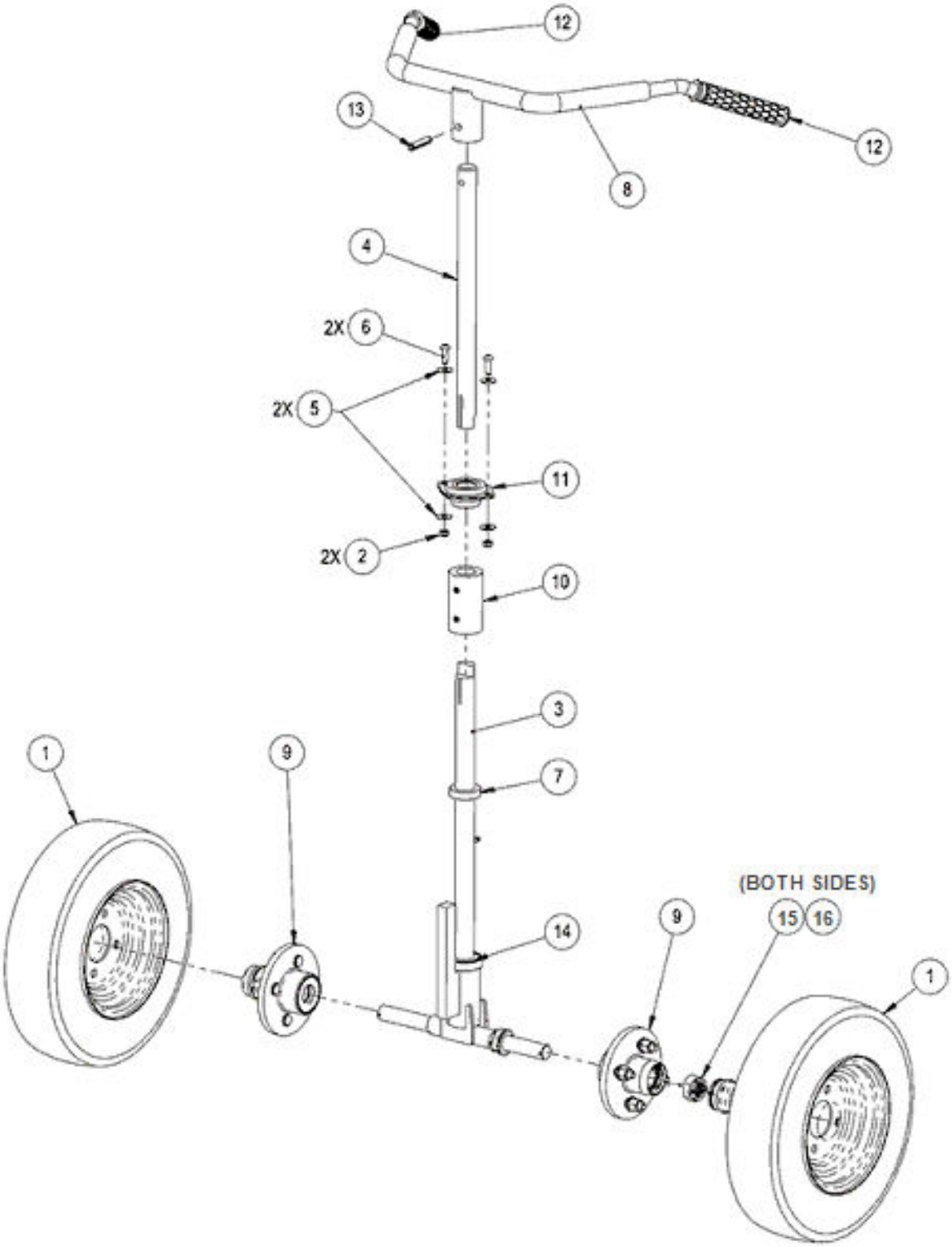

Steering system (2 of 2)

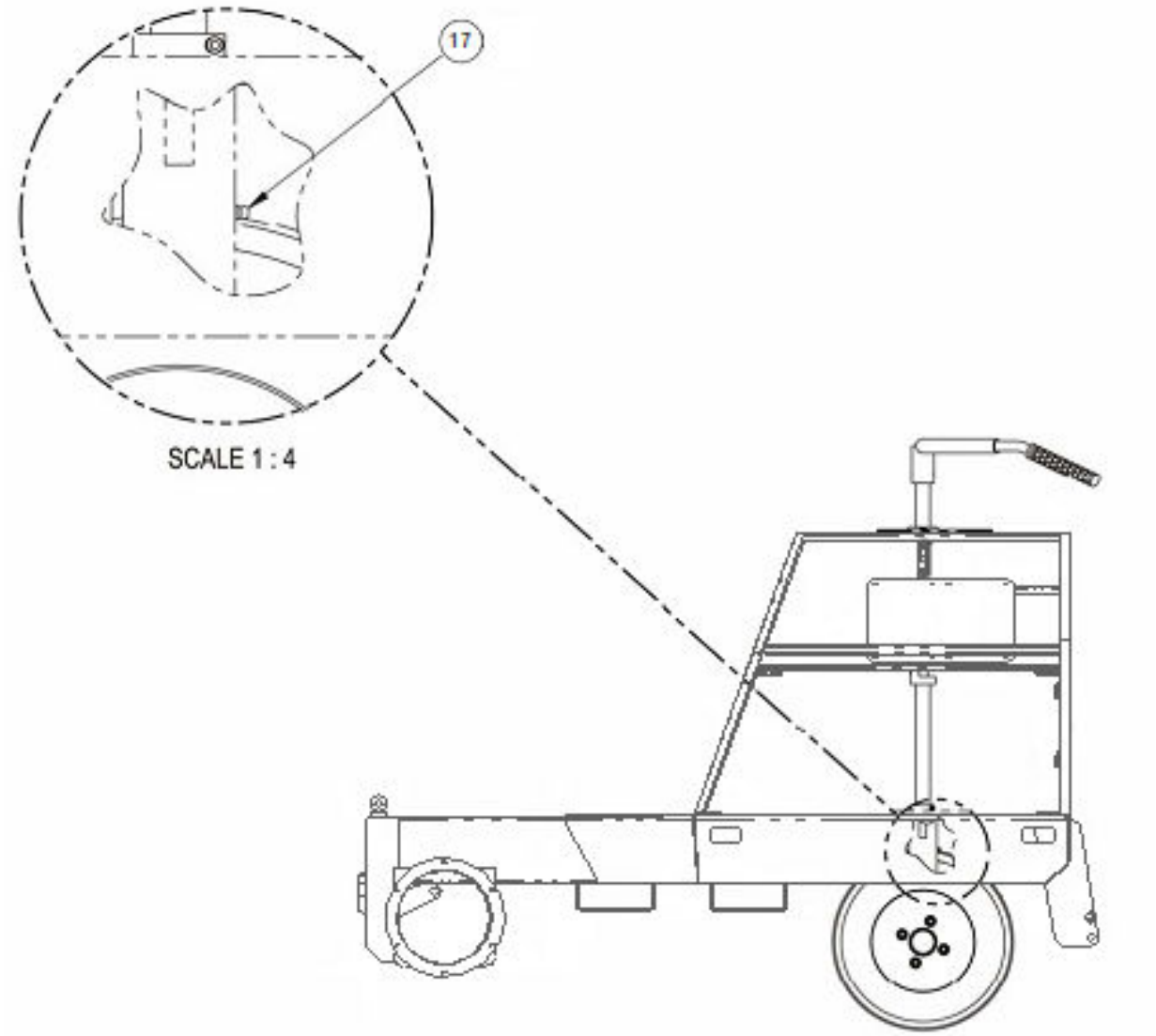

Item no.	Part number	Description	Qty.
1	842012	WHEEL ASSY., 480/8 FOAM FILLED	2
2	980300	L-NUT, NYLON, THIN, 3/8-16 GR2	2
3	200159	WLDT, STEERING SHAFT	1
4	200161	SHAFT, UPPER STEERING	1
5	981120	FW, 3/8" REG	4
6	981110	BHS, SOCKET, 3/8-16 X 1.0, Z	2
7	796060	SHAFT COLLAR, 1.25", Z	1
8	500815	HANDLE BAR	1
9	760160	WHEEL HUB (W/ 4 LUGS)	2
10	760670	SPLIT COUPLING	1
11	760680	FLANGE BEARING	1
12	796035	GRIP	2
13	980451	ROLL PIN	1
14	W4033	THRUST BEARING	1
15	994510	NUT, CASTLE, 1-14 UNF GR2	2
16	796075	COTTER PIN	2
17	794550	FITTING, GREASE	1

Table 13: Steering system parts list

Battery tray

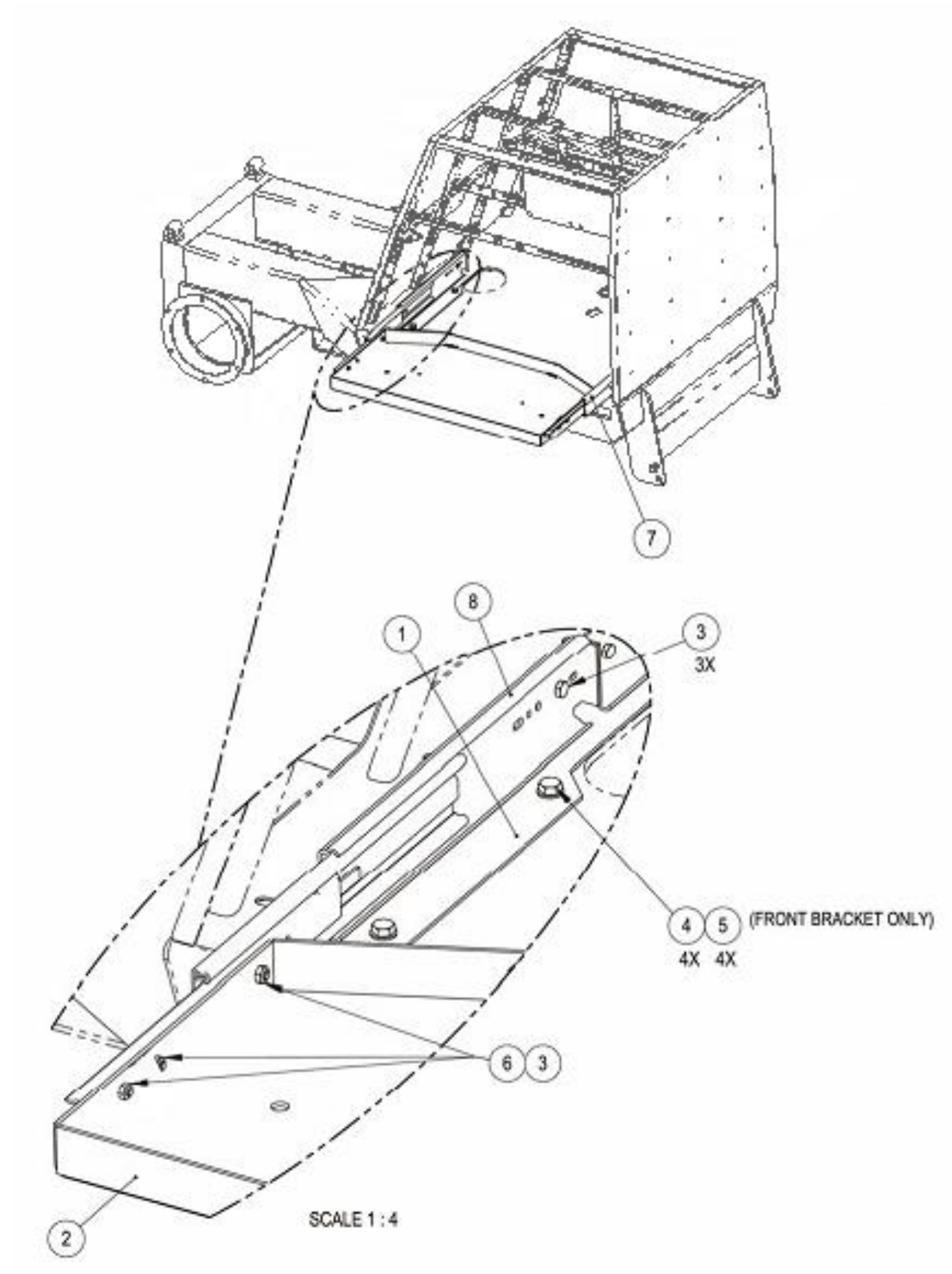

Item no.	Part number	Description	Qty.
1	200092	WLDT, DRAWER SLIDE MNT	1
2	200936	WLDT, BATTERY TRAY	2
3	993440	HHCS, 1/4-20 X 0.50, GR5	12
4	991761	HHCS, 3/8-16 X 1.25, GR5	4
5	981120	FW, 3/8" SAE	4
6	990150	L-NUT, NYLON, THIN, 1/4-20 GR5	12
7	200318	DRAWER SLIDE, 400 LB, 14", RH	2
8	200319	DRAWER SLIDE, 400 LB, 14", LH	2

Table 14: Battery tray parts list

Panels

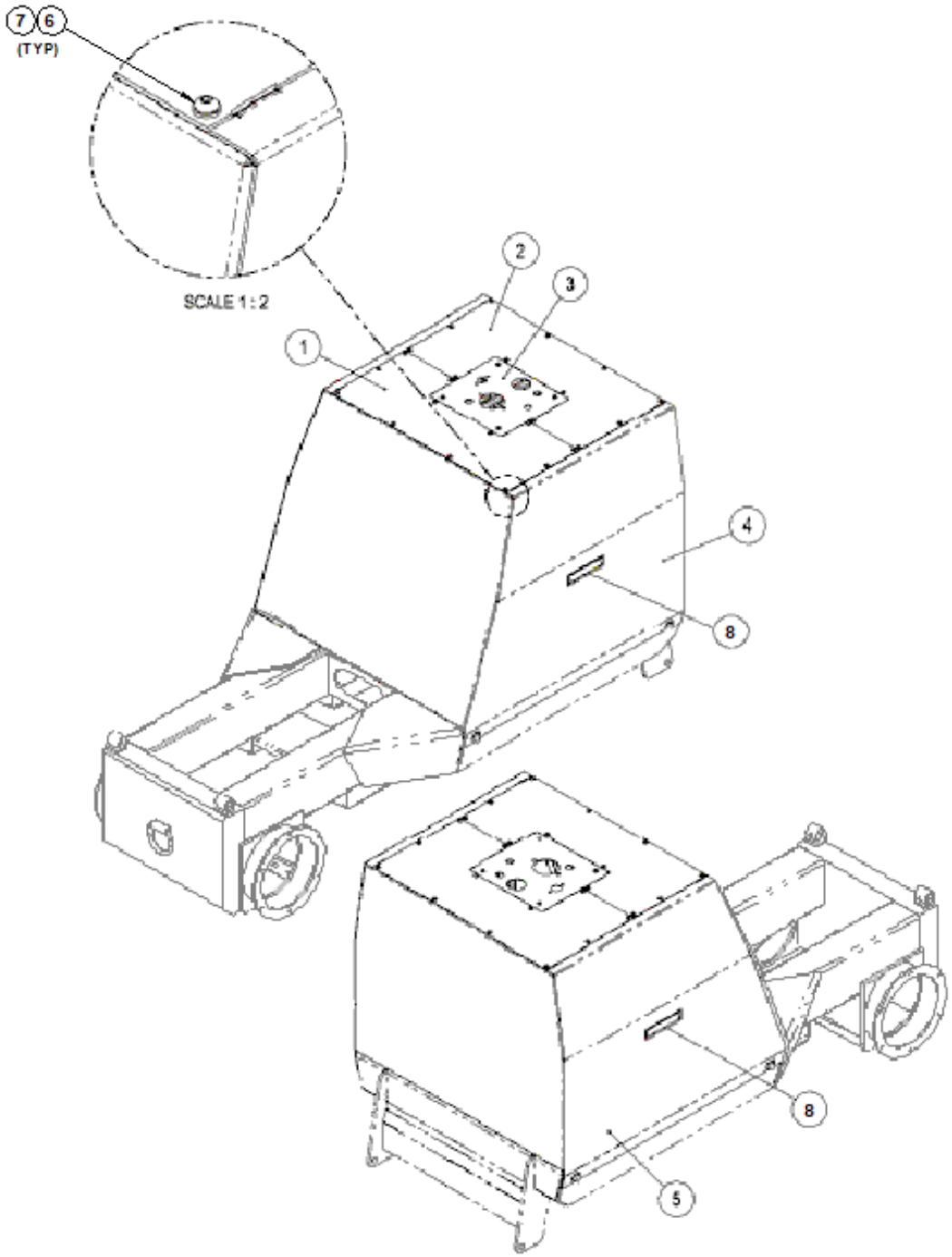

Item no.	Part number	Description	Qty.
1	200949	SHT, ENCLOSURE, TOP, FRNT	1
2	200950	SHT, ENCLOSURE, TOP, REAR	1
3	200058	WLDT, ENCLOSURE, TOP CENTER	1
4	200951	ASSY, DOOR, LH	1
5	200952	ASSY, DOOR, RH	1
6	981745	FW, 1/4" SAE	28
7	993440	BHS, SOCKET, 1/4-20 X 0.50, BLK	28
8	200062	RECESSED HANDLE, SNAP IN	2

Table 15: Panels parts list

Operator platform

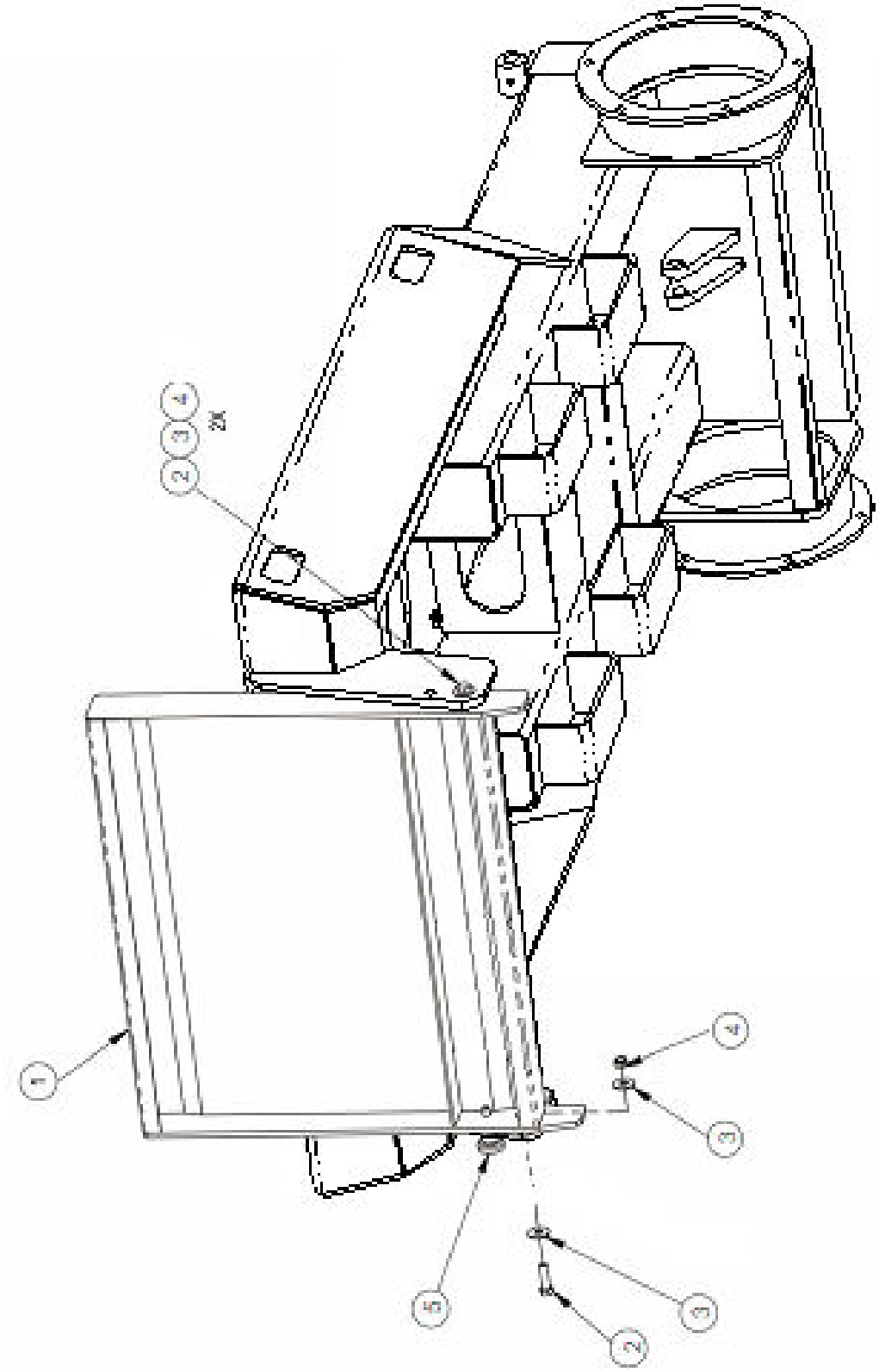

Item no.	Part number	Description	Qty.
1	200954	WLDT, OP PLATFORM	1
2	981560	HHCS, 3/8-16 X 1.25, GR5	2
3	993830	FW, 3/8" REG	4
4	980370	L-NUT, NYLON, THIN, 3/8-16 GR2	2
5	200351	PLUNGER PIN, WELD ON	1

Table 16: Operator platform parts list

Decals / Manual

⚠ DANGER

Power Buggy Operating Safety Precautions

Failure to read, understand and obey the operator's manual and the following safety rules will result in death or serious injury.

Improper Use Hazard

The operator is responsible for safe machine operation. This includes:

1 Avoid hazardous situations.
2 Always perform a pre-operation inspection.
3 Always perform function tests prior to use.
4 Inspect work place.
5 Only use the Power Buggy as it was intended.

Do not operate unless:

You read, understand and obey:
-manufacturer's instructions and safety rules -- safety and operator's manuals and decals
-employer's safety rules
-applicable governmental regulations

You are properly trained to safely operate this machine.

Know the rated load of the buggy. Do not exceed the capacity of the buggy, and account for the conditions that can reduce the load that should be carried such as ground conditions, slopes, etc.

Be sure the buggy is stopped and parking brake is set before filling or dumping bucket.

Do not dump buggy when facing down a slope.



Travel on Uneven/Rough Terrain

Unit should only be operated at full speed on flat and level surface.

Do not exceed creep speed when traveling on rough or uneven surfaces!

Creep speed is **10 feet in 5 seconds** (120 feet per minute or 1.36 miles per hour) when traveling on uneven/rough terrain.

Always apply good judgment when determining a safe and proper creep speed.

When traveling on uneven/rough terrain, raise and secure the platform and walk behind the buggy.



Do not exceed creep speed when traveling on rough or uneven surfaces!

Travel on Slopes

Always travel with **loaded** bucket directed **uphill.**

Always travel with **unloaded** bucket directed **downhill.**



Do not exceed a maximum permissible grade of 10% (6°).

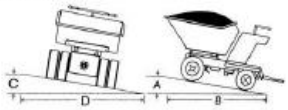

To calculate grade, divide the vertical rise by the horizontal run and multiply by 100.
% Grade = (A divided by B) x 100
% Grade = (C divided by D) x 100

Travel facing directly up/down the slope, whenever possible.

Travel on slopes at creep speed only and always ensure safe stopping distances.

Avoid sudden starts, stops and direction changes.



These instructions supercede all previous instructions.

OPERATING INSTRUCTIONS

1. **PLEASE READ THE OWNERS MANUAL BEFORE OPERATION**
2. Make sure the Main Power Switch (red mushroom) is in the off (down) position.
3. Make sure the Controller Switch (left of red mushroom switch) is in the off position (counter clockwise).
4. Make sure the Drive Control Switch located on the right side of handlebars is in the NEUTRAL position.
5. Check the Throttle function located on the right side of handlebars. Throttle should work freely and return to starting position when released. If operation of the throttle is not free, do not attempt to operate machine until corrected.
6. Make sure the charging cord is unplugged from the Charging Port located on the rear housing.
7. Lift Main Power Switch (red mushroom) to up position.
8. Turn Controller Switch to on position (clockwise).
9. Make sure Battery Gauge located on the center of the top housing is showing a sufficient charge for batteries. NEVER operate buggy with less than 20% of charge. Buggy will abruptly stop at or around 10% of charge.
10. Make sure the Horn Switch located on the left hand side of handlebars is working properly.
11. While standing on the Ride Platform select forward or reverse on the Drive Switch and slowly engage the Throttle. Movement will begin immediately.
12. To stop travel, release the Throttle and coast to a stop. The Drive Motors have a built in braking system that engage once the throttle is completely released.
13. To dump contents come to a complete stop (block wheels if on a slope or incline) and in a NEUTRAL position engage the Dump Switch.

SHUT DOWN INSTRUCTIONS

1. Come to a complete stop.
2. Put Drive Switch in the Neutral position.
3. Turn Controller Switch to off position.
4. Push down Main Power Switch to off position.
5. Block wheels if on a slope or incline.
6. **DO NOT** store buggy outside. Store in dry, level, secure area.
7. Charge buggy with approved charging cord.

Part No. 200131

EPB48-16

Item no.	Part number	Description	Qty.
1	200131	DECAL, DANGER & OPERATION	1
2	200900	DECAL, EPB48-16	2
3	200999	EPB4816 MANUAL	

Table 17: Decals / Manual Parts List

Service record

Type	Date

The Power Buggy LLC

5572 Brecksville Road, Suite B
Independence, OH 44131
T: 1-877-320-4639
F: 216-446-3989